Single-phase ARD Series Elevator Automatic Rescue Device

User Manual

Rev.2.9

ShenYang BlueLight New Generation Technology Co.,Ltd

1 Product Overview

1.1 Model Descriptions

ARD 4 S 15 A1 - G

ARD [illegible] *G: [illegible]*

Sing.4(e)TBTeqBBeVBeEi1BBEcpi(s)T(x)SHTqBBBVBBEcmi(s)T(x)SHTqBBBVBBEcmi(s)T(x)SHTqBBBVBBEcm

2.2 ARD2SXX Application Wirings

2.3

2.4 ARD2EXX Application Wirings

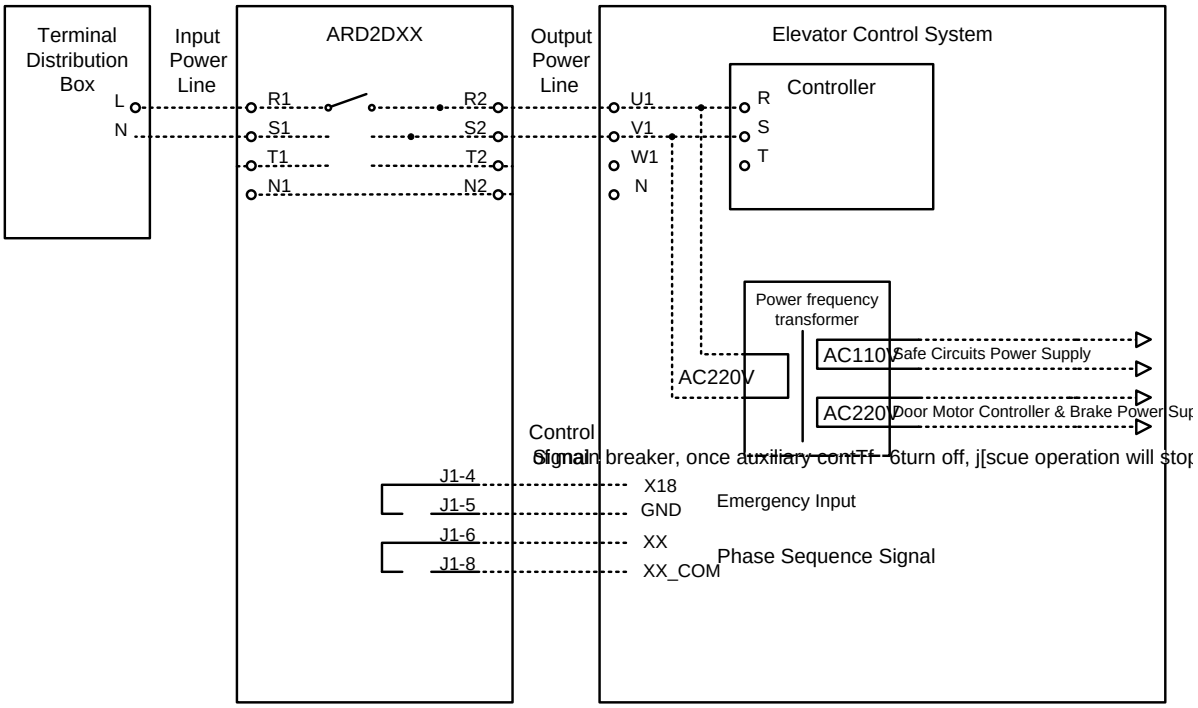

2.5 ARD4SXX-Z Application Wirings

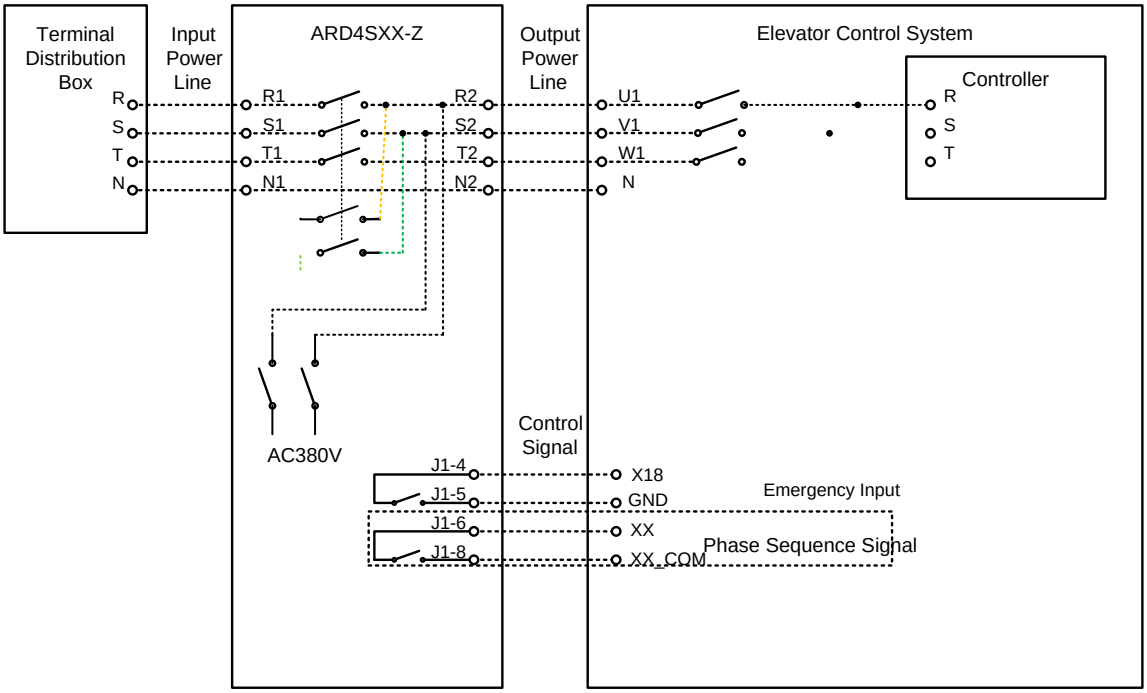

3 Usage Description and Battery Maintenance

3.1 Working principle

3.2 Operation Panel



Figure 3.1 Appearance diagram of operation panel

3.2.1 The definition of LED Indicator Lamps

Table

Table 3.1 The definition and functions of the LED indicator lamps

Name	Function

Table 3.3 ARD fault list (Cont'd)

Fault Code	Descriptions	Reasons and Solutions

3.3 Battery Replacement Guidance

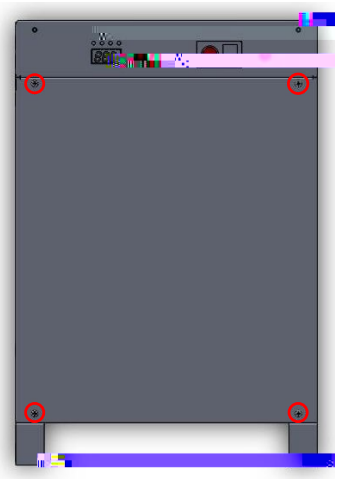

Figure 3.3 Remove Face Plate

Figure 3.4 Battery Connection